INSTRUCTION MANUAL

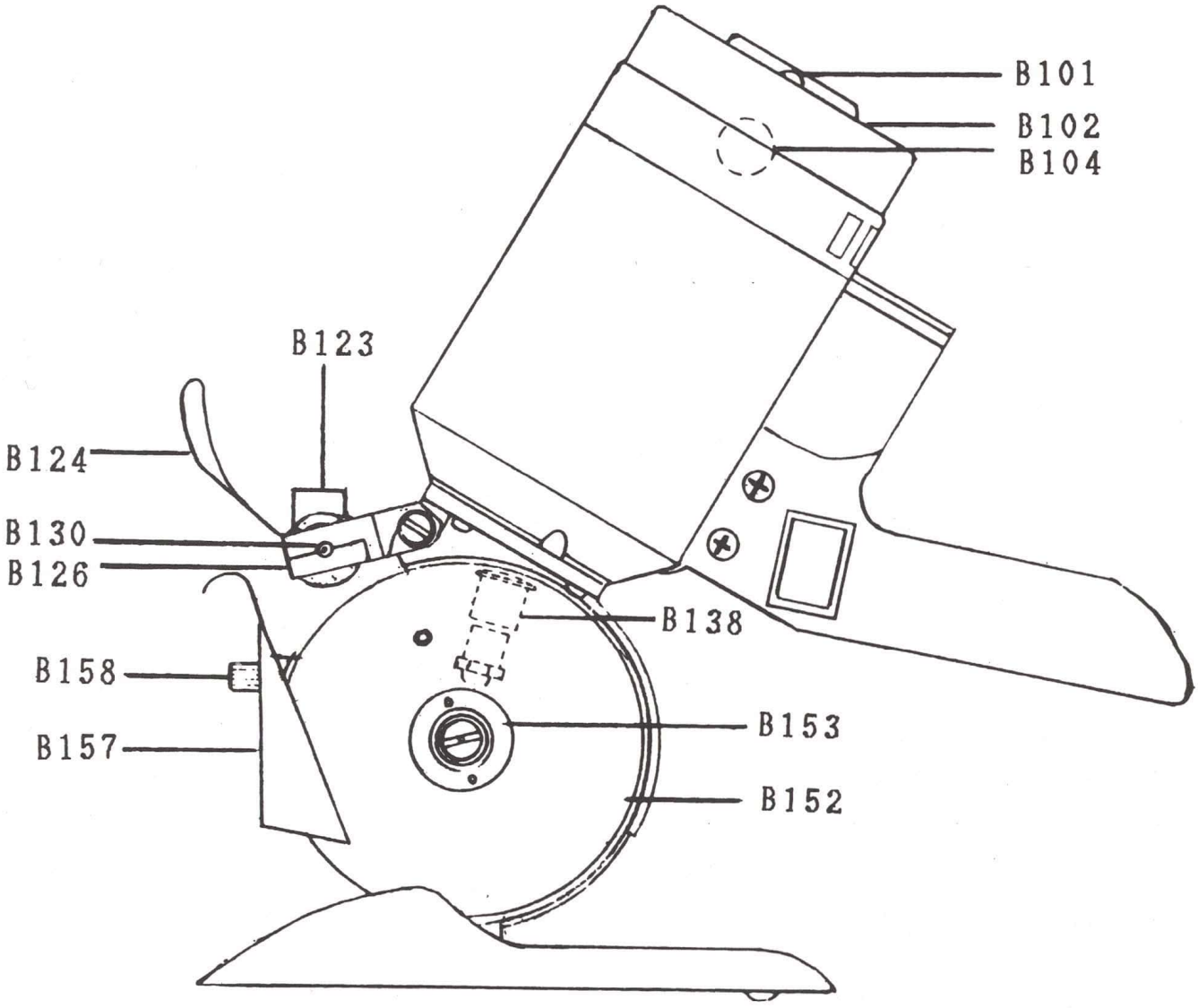

Type:MB-90 **Blade Size:90mm**

Cutting Capacity: 22mm

Power:80W **Net Weight: 2.5Kg**

※Special Attention

***Read this instruction before use it**

***Save this insturction after read it**

2012-7-2000

OPERATING INSTRUCTIONS

※SHARPENING THE BLADE

1. Connect the plug of the electric cord to the power supply
2. Push the switch to start the machine
3. Pressing the presser lever (B124) down for a few seconds so that the sharpening stone lightly touches and grinds the blade for several times

※HOW TO REPLACE BLADE

1. Make sure the electric cord is disconnected from the power source
2. Turn off the screw for finger guard (B158) and remove the finger guard (B157)
3. Using a wrench (B161) remove the blade lock nut (B153) by turning it left
4. Remove the blade (B152) and clean any dust or dirt from machine
5. Replace the blade

※HOW TO REPLACE CARBON BRUSH

1. While the machine is unplugged. Remove the screw (B101) and pull the cover (B102) upward
2. Remove the screwed cap (B104) over the carbon brush and replace the carbon brush (B103)
3. Put the cover (B102) back into its original position and tighten the screw
4. Check right and left carbon brushes from time to time and always replace both right and left carbon brushes when worn out

※LUBRICATION AND MAINTENANCE

1. Turn the grease cup (B138) clockwise a little bit to inject the grease into the gear box
2. Make sure to add grease supplied with the machine to the grease cup (B137) when the grease cup is screwed down to the bottom
3. Always keep the machine clean and free from remnants

※WARNING

1. Never put your hands in front of the blade while operating
   No trabajar sin guantes de acero no sin los dispositivos de seguridad.

2. Be sure to unplug while not in use for safety
   Antes de abrir esta tapa, apague el suministro de energia y desconecte el cable de la corriente

3. Before plug in the Electricity to the machines to be sure the motor switch is in the "OFF" position
   Leer atentament el manual de instrucciones antes de poner la máquina en marcha.

Machine Demension Drawing:

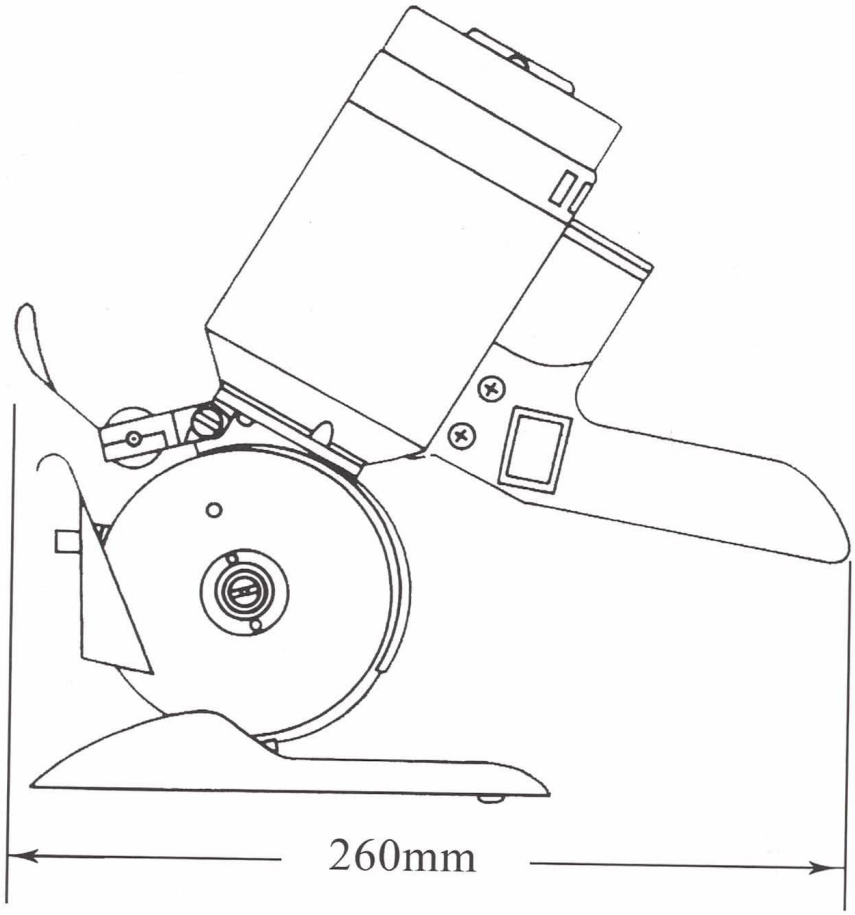

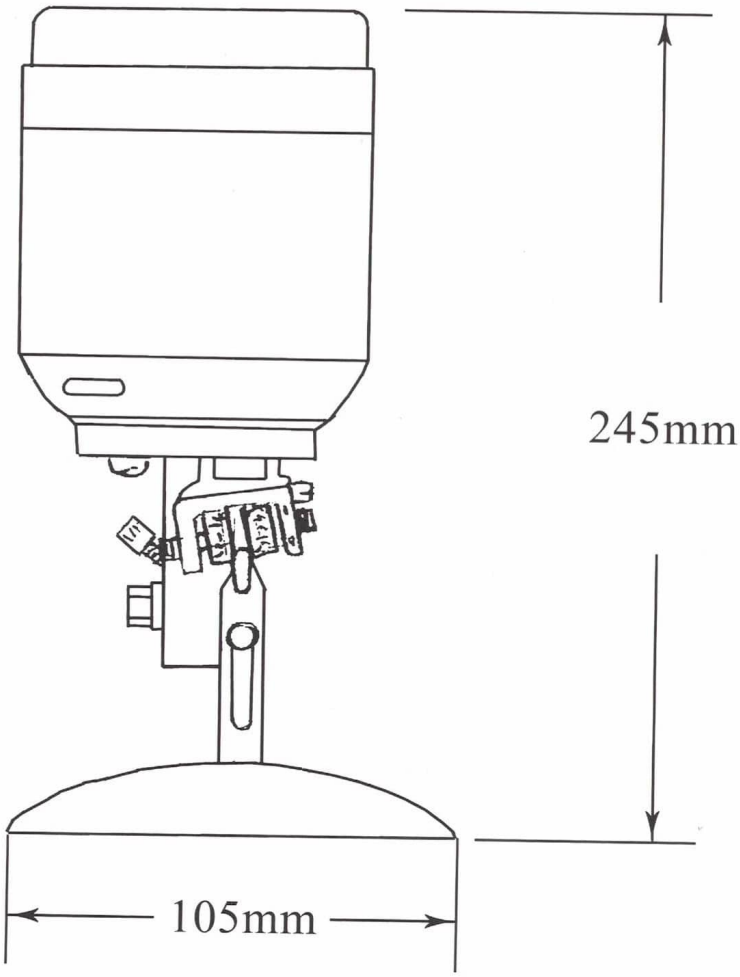

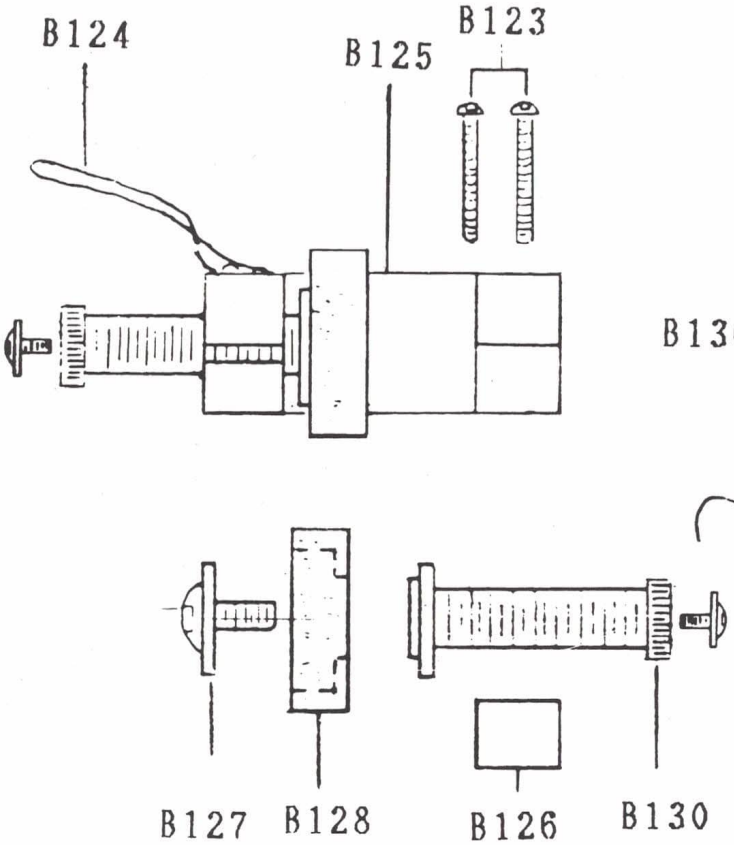

FIG.2

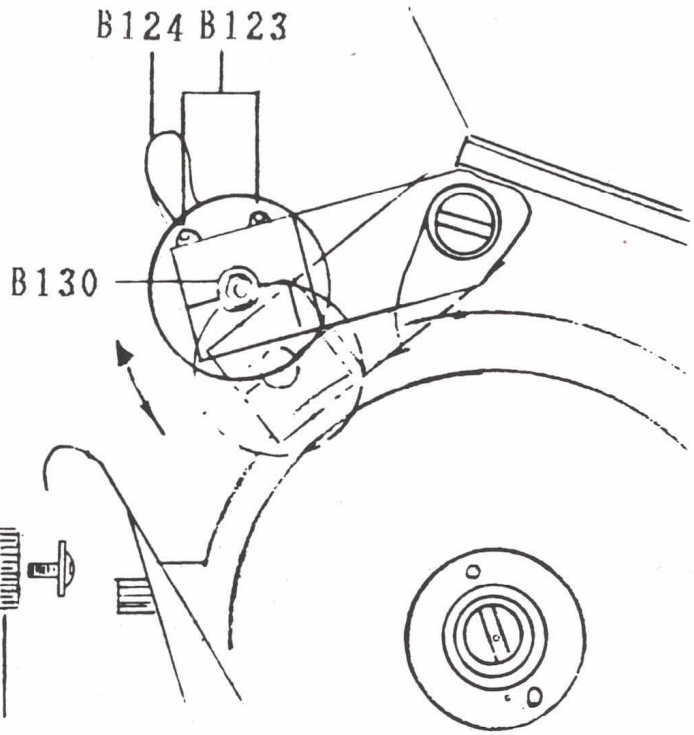

FIG.1

※HOW TO ADJUST SHARPENING STONE (SEE FIG.1)

As the stone wears it does not touch against the blade for grinding

1. Loosen 2 screws (B123)
2. While pressing the presser lever (B124) turn the thumb tube (B130) clockwise till the sharpening stone touches the blade
3. Release presser lever (B124) to its original place then tighten the 2 screws (B123)
4. Do the same thing on the other side of sharpening stone

※How TO REPLACE SHARPENING STONE (SEE FIG.2)

1. Unscrew the screws (B123) to remove the sharpening stone assembly (B127 thru B131)
2. Unscrew the screw (B127) to replace a new sharpening stone (B128)
3. Put the new sharpening stone assembly back and adjust it the way to adjust the stone
4. Tighten the screws (B123)

PARTS ASSEMBLY & ACCESSORIES

(—)Motor Completed with Handle:

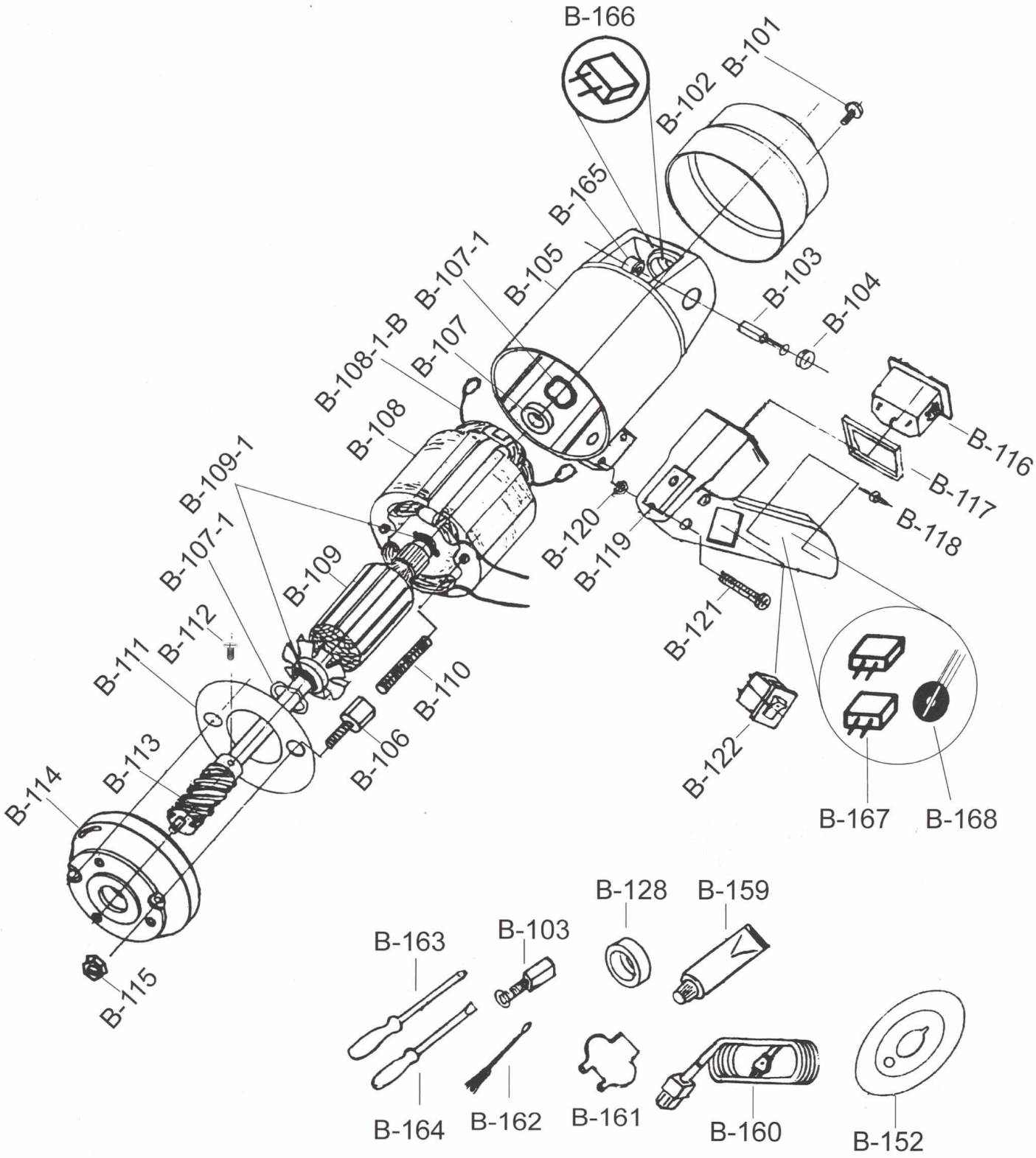

(二) Gear Head with Base:

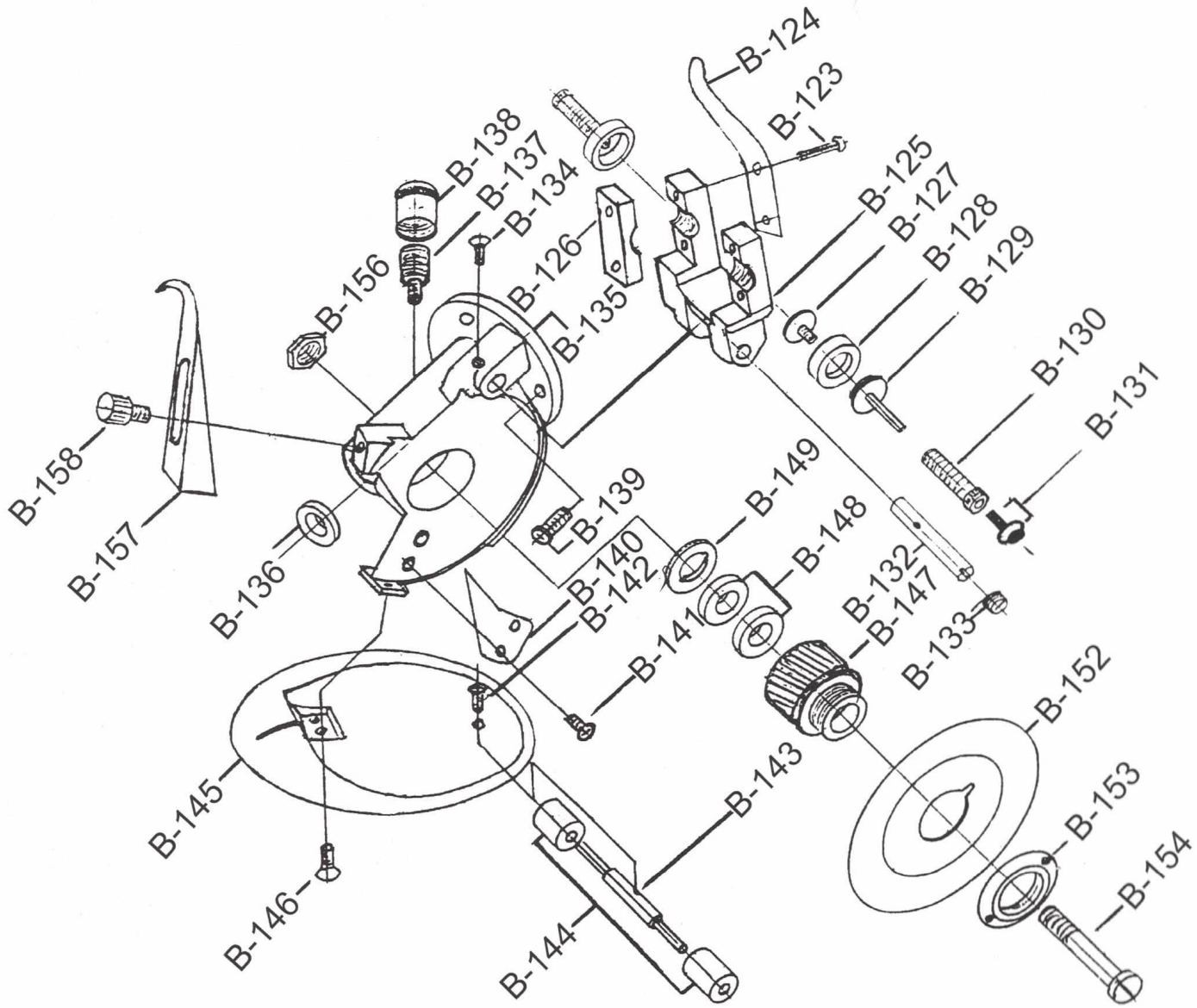

PARTS LIST

PARTS NO.	PARTS NAME	零件名稱
B-101	Screw for Cover	後蓋螺絲
B-102	Cover	後蓋
B-103	Carbon Brush with Spring	帶彈簧碳刷
B-104	Cap for Carbon Brush	碳刷蓋
B-105	Motor Cover	馬達外殼
B-106	Socket Screw	套筒螺絲
B-107	Ball Bearing	培林
B-107-1	Wave Washer	波形墊片
B-108	Stator With Coils	定子線圈
B-108-1-A	Snap	壓著端子
B-108-1-B	Spring connector	導電彈簧圈
B-109	Rotor	轉子線圈
B-109-1	O-Ring	扣環
B-110	Stud Bolt	定子固定螺絲
B-111	Air Guide	空氣導流板
B-112	Screw for Shaft Gear	蝸桿固定螺絲
B-113	Shaft Gear	蝸桿
B-114	Front Cover	馬達前蓋
B-115	Nut	螺帽
B-116	Receptacle	插座
B-117	Receptacle Fixed base	插座固定座
B-118	Screw	螺絲
B-119	Operating Handle	手把
B-120	Nut for Handle	螺帽
B-121	Screw for Handle	螺絲
B-122	Switch	開關
B-123	Screw	螺絲
B-124	Presser Lever	押把
B-125	Sharpening Stone Bracket(A)	砂輪固定座 (A)
B-126	Sharpening Stone Bracket(B)	砂輪固定座 (B)
B-127	Screw and Washer for Stone	砂輪固定螺絲與墊片
B-128	Sharpening Stone	砂輪
B-129	Sharpening Stone Fixed Base	砂輪座
B-130	Pipe Screw	砂輪座套圈
B-131	Screw for Sharpening Stone Fixed Base	砂輪座固定螺絲
B-132	Grinder Set Shaft	砂輪組軸心

PARTS NO.	PARTS NAME	零件名稱
B-133	Spring	彈簧
B-134	Screw for Shaft	軸心固定螺絲
B-135	Gear Box	齒輪箱
B-136	Bushing	軸襯套
B-137	Grease Cup	黃油杯
B-138	Cap for Crease Cup	油杯蓋
B-139	Screw	螺絲
B-140	Guide plate	導引片
B-141	Screw for Guide Plate	導引片固定螺絲
B-142	Screw for Roller Shaft	輪軸固定螺絲
B-143	Roller Shaft	輪軸
B-144	Rollers	輪子
B-145	Base Plate	底座
B-146	Set Screw for Gear Box	螺絲
B-147	Worm Gear	蝸輪
B-148	Ball Bearing	培林
B-149	Ball Bearing Lock Nut	培林固定螺帽
B-152	Blade	刀片
B-153	Blade Lock Nut	刀片固定螺帽
B-154	Screw for Gear	蝸輪固定螺絲
B-156	Nut for worm Gear Screw	蝸輪固定螺絲用螺帽
B-157	Finger Guard	護片
B-158	Screw for Finger Guard	護片螺絲
B-159	Grease	黃油
B-160	Code Complete with Earth	電源線
B-161	Wrench	扳手
B-162	Cleaning Brush	清潔刷
B-163	Screwdriver (+)	十字起子
B-164	Screwdriver (-)	一字起子
B-165	Carbon Brush Fixed Base	碳刷座
B-166	Capacitor	電容 (CE only)
B-167	Capacitor	電容 (CE only)
B-168	Inductor	電感 (CE only)